Display Unit 29E31S

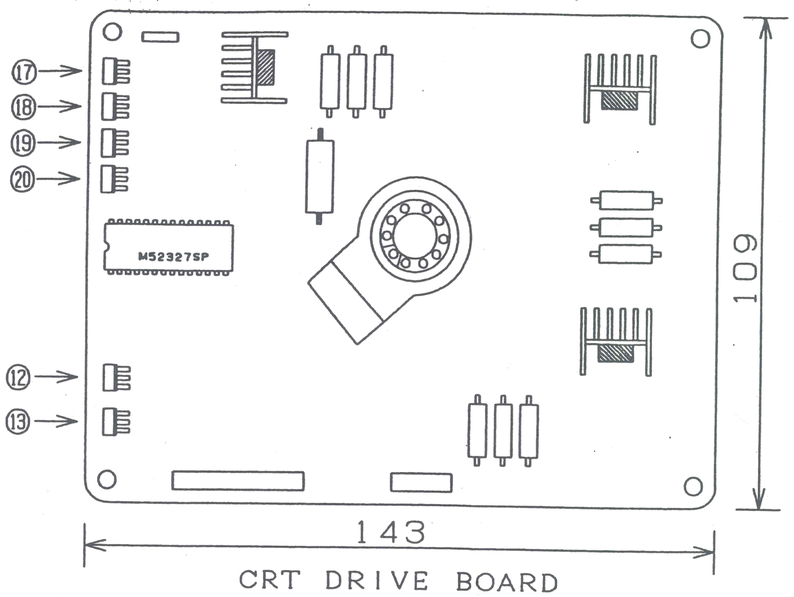

① CONTRAST	(VR112)	CONTRAST ADJUSTMENT Turn the pot clockwise to increase the CONTRAST.
② BRIGHT	(VR481)	BRIGHTNESS ADJUSTMENT Brightness adjustment for the raster. Turn the pot clockwise to increase the brightness.
③ H. SIZE	(VR455)	HORIZONTAL SIZE ADJUSTMENT Adjustment for horizontal raster size.
④ H. POSI	(VR451)	HORIZONTAL POSITION ADJUSTMENT Adjustment for horizontal image position.
⑤ V. SIZE	(VR353)	VERTICAL SIZE ADJUSTMENT Adjustment for vertical raster size.
⑥ V. POSI	(VR351)	VERTICAL POSITION ADJUSTMENT Adjustment for vertical image position.
⑦ PARA	(VR458)	PARALLELOGRAM DISTORTION CORRECTION Adjustment for parallelogram distortion.
⑧ PIN AMP	(VR454)	PINCUSHION DISTORTION CORRECTION Adjustment for pincushion distortion.
⑨ T/B TRAPE	(VR456)	TRAPEZOID DISTORTION CORRECTION Adjustment for trapezoid distortion.
⑩ V. LIN	(VR354)	VERTICAL LINEARITY ADJUSTMENT Adjustment for vertical linearity of top and bottom portion.
⑪ HOLD	(VR442)	HORIZONTAL SYNCHRONIZATION ADJUSTMENT Adjustment the pot when the image flows laterally.
⑫ R. GAIN	(VR901)	RED GAIN ADJUSTMENT Turn the pot clockwise to increase the RED color gain.
⑬ B. GAIN	(VR902)	BLUE GAIN ADJUSTMENT Turn the pot clockwise to increase the BLUE color gain.
⑮ FOCUS		FOCUS ADJUSTMENT Adjustment the beam focus to the optimum.
⑯ SCREEN		SCREEN ADJUSTMENT Adjustment raster brightness to cutoff point. (back raster just disappear)

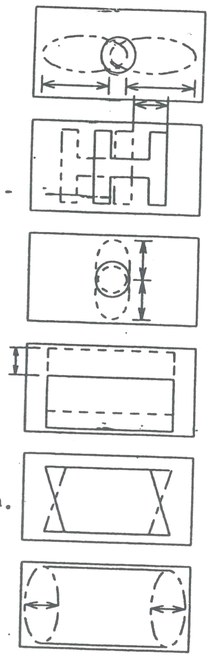

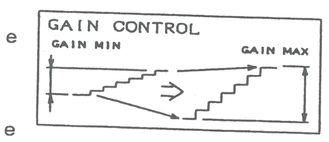

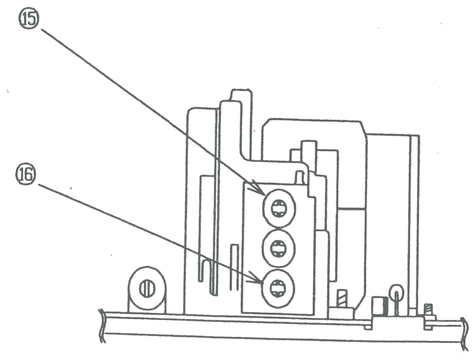

⑰ SUB CONT (VR903) SUBCONTRAST ADJUSTMENT
Adjustment for the maximum CONTRAST.

⑱ R-BLK (VR904) RED CUTOFF ADJUSTMENT
Turn the pot clockwise to increase the red color.

⑲ G-BLK (VR905) GREEN CUTOFF ADJUSTMENT
Turn the pot clockwise to increase the green color.

⑳ B-BLK (VR906) BLUE CUTOFF ADJUSTMENT
Turn the pot clockwise to increase the blue color.

㉑ CONNECTOR FOR DEFLECTION YORK POLARITY SWITCH

P301

P401	NORMAL	REVERSE
NORMAL	SANWA normal image	SANWA top and bottom reversed image
REVERSE	SANWA right and left reversed image	SANWA 180° degree rotated image