29E31S Display Unit Circuit Block Diagram
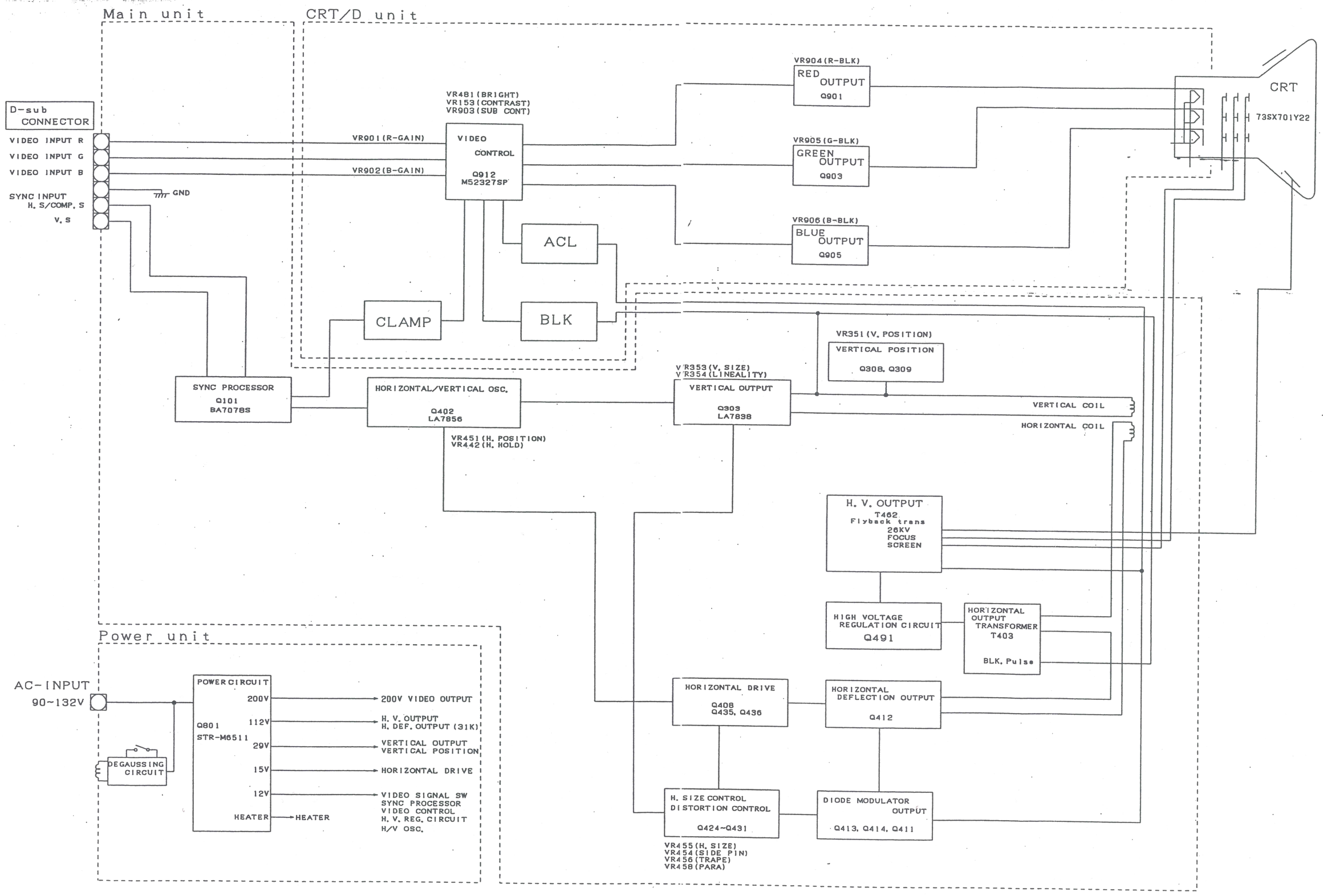
2. CIRCUIT BLOCK DIAGRAM